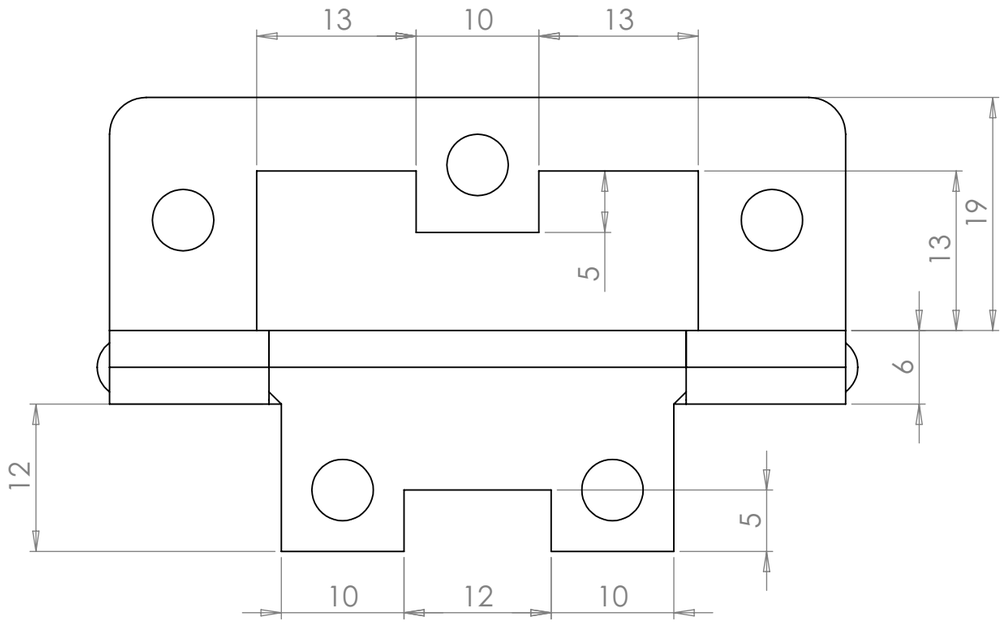

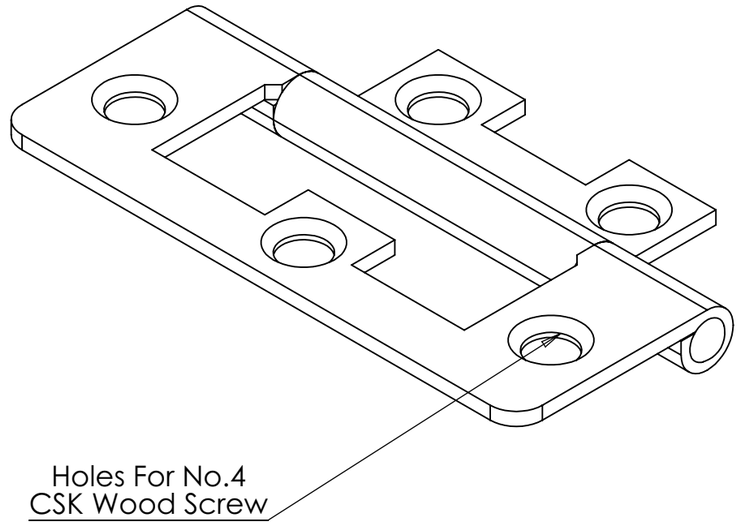

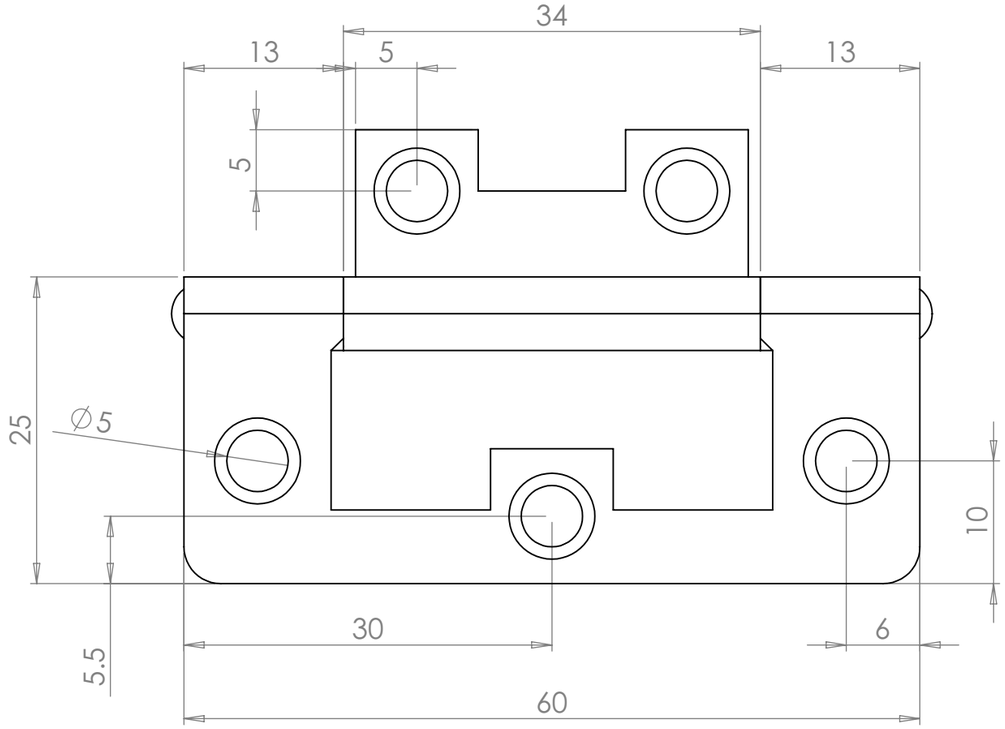

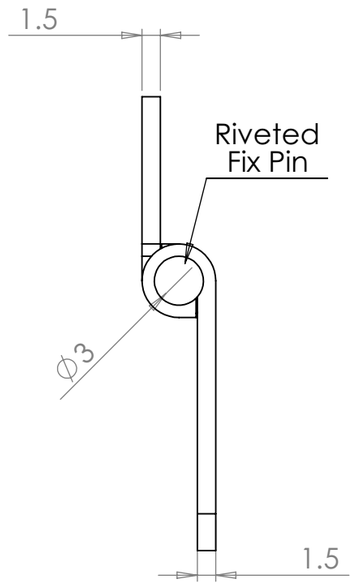

UNLESS OTHERWISE STATED DIMENSIONS ARE IN MILLIMETRES (MM)		COMPANY: A PERRY & CO. (HINGES) LTD. APERRY always in stock
PRODUCT MODEL No. 105-60mm		
DRAWN BY: GRAEME SERVICE	SCALE 2:1 / DATE: 10/06/2010	PRODUCT WEIGHT: 25g — A3